■ INTRODUCTION:

The CE8502 is a 1.5MHz constant frequency, slope compensated current mode PWM synchronous step-down converter. High switching frequency allows the use of small surface mount inductors and capacitors. The internal synchronous switch increases efficiency and eliminates the need for an external Schottky diode. It is ideal for powering portable equipment which runs from a single cell Lithium-Ion battery. 100% duty cycle provides low dropout operation, extending battery life in portable systems. Low output voltages are easily supported with the 0.6V feedback reference voltage.

■ FEATURES:

- High efficiency : Up to 96%
- Output Current: 600mA (Typ.)
- 1.5MHz Constant Switching Frequency
- No Schottky Diode Required
- Input Voltage: 1.8V to 5.5V
- 0.6V Reference Allows Low Output Voltage
- Low Dropout: 100% duty Cycle
- Quiescent Current: 270μA
- Shutdown Current: <1μA
- Current Mode Operation for Excellent Line and Load Transient Response
- Built-in Thermal Protection
- Package: SOT-23-5

■ APPLICATIONS：

- Cellular and Smart Phones
- Personal Information Appliances
- Wireless and DSL Modems
- Digital Still and Video Cameras
- Microprocessors Core Supplies
- Portable consumer equipments

■ PIN CONFIGURATION:

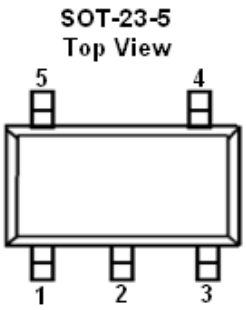

ORDER INFORMATION:

CE8502①②③④

DESIGNATOR	SYMBOL	DESCRIPTION
①	A	Standard
②③	Integer	Output Voltage e.g.1.8V=②:1, ③:8 Adj=②:, ③:
④	M/MR	Package：SOT-23-5

Tabel1. Pin Description

PIN NUMBER		PIN NAME	FUNCTION
M	MR		
1	3	CE	Chip Enable Pin
2	2	V_{SS}	Ground
3	5	SW	External Inductor Connection Pin
4	1	V_{IN}	Power Input
5	4	V_{OUT}/FB	Output Pin/Feedback(ADJ Version)

■ BLOCK DIAGRAM

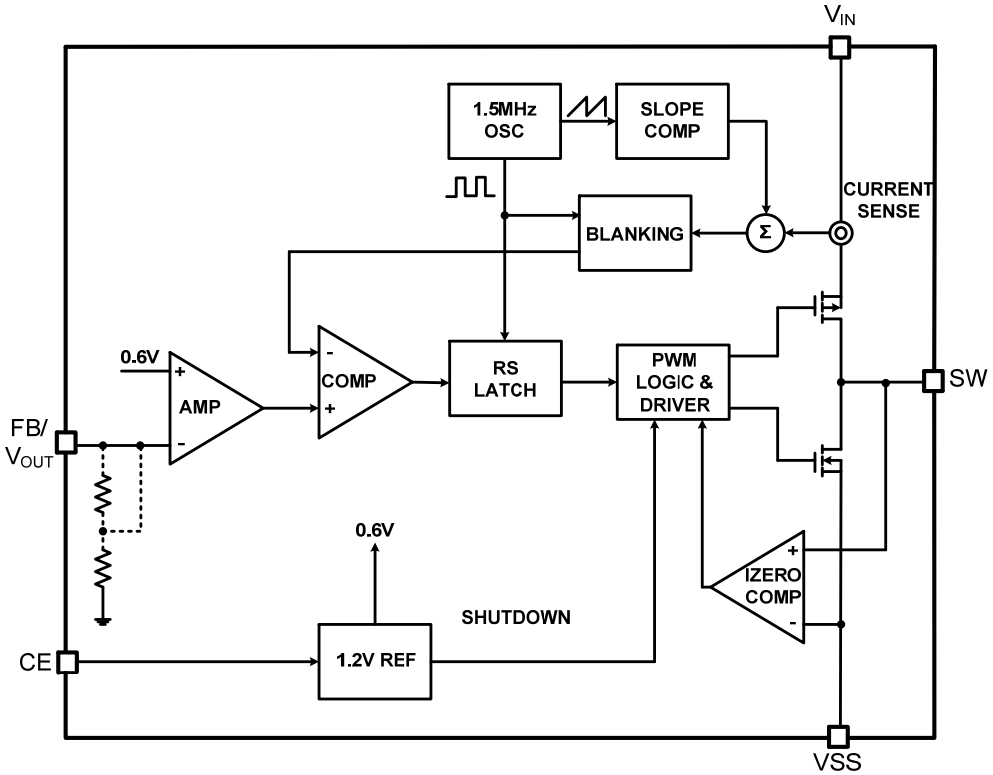

■ ABSOLUTE MAXIMUM RATINGS

PARAMETER		SYMBOL	RATINGS	UNITS
Input Voltage		V_{IN}	V_{SS}-0.3~V_{SS}+6.5	V
CE,SW,FB/V_{OUT} Voltage			V_{SS}-0.3~V_{IN}+0.3	V
Peak SW Sink and Source Current		I_{SWMAX}	1500	mA
Power Dissipation	SOT-23-5	Pd	400	mW
Operating Temperature		T_{opr}	-40~+85	℃
Junction Temperature		T_j	125	℃
Storage Temperature		T_{stg}	-40~+125	℃
Soldering Temperature & Time		T_{solder}	260℃, 10s	

■ ELECTRICAL CHARACTERISTICS

CE8502 Series **(V_{IN}=CE=3.6V, Ta=25℃, Test Circuit Figure1, unless otherwise specified)**

PARAMETER	SYMBOL	CONDITIONS	MIN	TYP	MAX	UNITS
Output Voltage	$V_{OUT(F)}$ (1)	I_{OUT} =100mA	V_{OUT}×0.97	V_{OUT}	V_{OUT}×1.03	V
Feedback Voltage	V_{FB}	T_A=25℃	0.5880	0.600	0.6120	V
		0℃≤T_A≤85℃	0.5865	0.600	0.6135	
		-40℃≤T_A≤85℃	0.5850	0.600	0.6150	
Input Voltage	V_{IN}		1.8		5.5	V
Supply Current	I_{SS}	V_{FB}=0.50V		270	400	μA
Shutdown Current	I_{SHDN}	V_{CE}=V_{SS}		0.1	1.0	μA
Feedback Current	I_{FB}	V_{FB}=0.65V			±30	nA
Maximum Output Current	I_{OUT}	—	600			mA
V_{FB} Line Regulation	ΔV_{FB}	V_{IN}= 1.8V~5.5V		0.20		%/V
Output Voltage Line Regulation	ΔV_{OUT}	V_{IN}= 1.8V~5.5V I_{OUT}=10mA		0.20		%/V
Output Voltage Load Regulation	ΔV_{LOAD}	I_{OUT} =1mA ~600mA		0.01		%/mA
Oscillator Frequency	f_{osc}	V_{FB}=0.6V or V_{OUT}=100%	1.2	1.5	1.8	MHz
Peak Inductor Current	I_{PK}	V_{IN}=3V,V_{FB}=0.5V or V_{OUT}=90%		1.0		A
$R_{DS(ON)}$ OF P-CH FET	R_{PFET}	I_{SW} = 100mA		0.45	0.60	Ω
$R_{DS(ON)}$ OF N-CH FET	R_{NFET}	I_{SW} = -100mA		0.35	0. 50	Ω
SW Leakage	I_{LSW}	CE=0,V_{SW}=0 or 5V, V_{IN}=5V		±0.01	±1	μA
CE "High" Voltage(2)	V_{CE}"H"		1.5		V_{IN}	V
CE "Low" Voltage(3)	V_{CE}"L"				0.3	V
CE Leakage Current	I_{CE}			±0.1	±1	μA

NOTE :

1. $V_{OUT(F)}$:The fixed voltage version effective output voltage.
2. High Voltage：Forcing CE above 1.5V enables the part.
3. Low Voltage：Forcing CE below 0.3V shuts down the device.

■ TYPICAL APPLICATION CIRCUITS

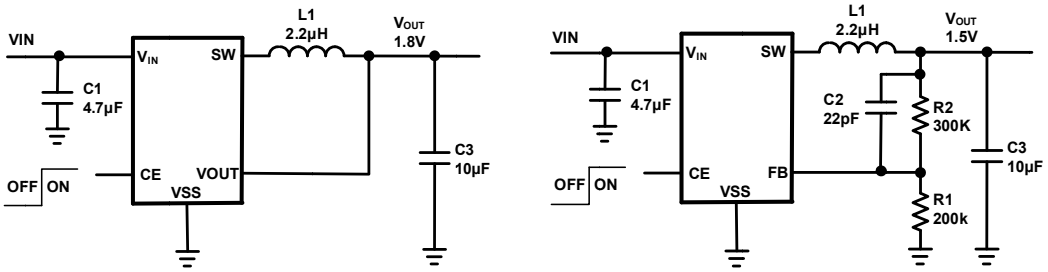

Figure1 Basic Application Circuit

■ TYPICAL PERFORMANCE CHARACTERISTICS

(Test Figure1 above unless otherwise specified)

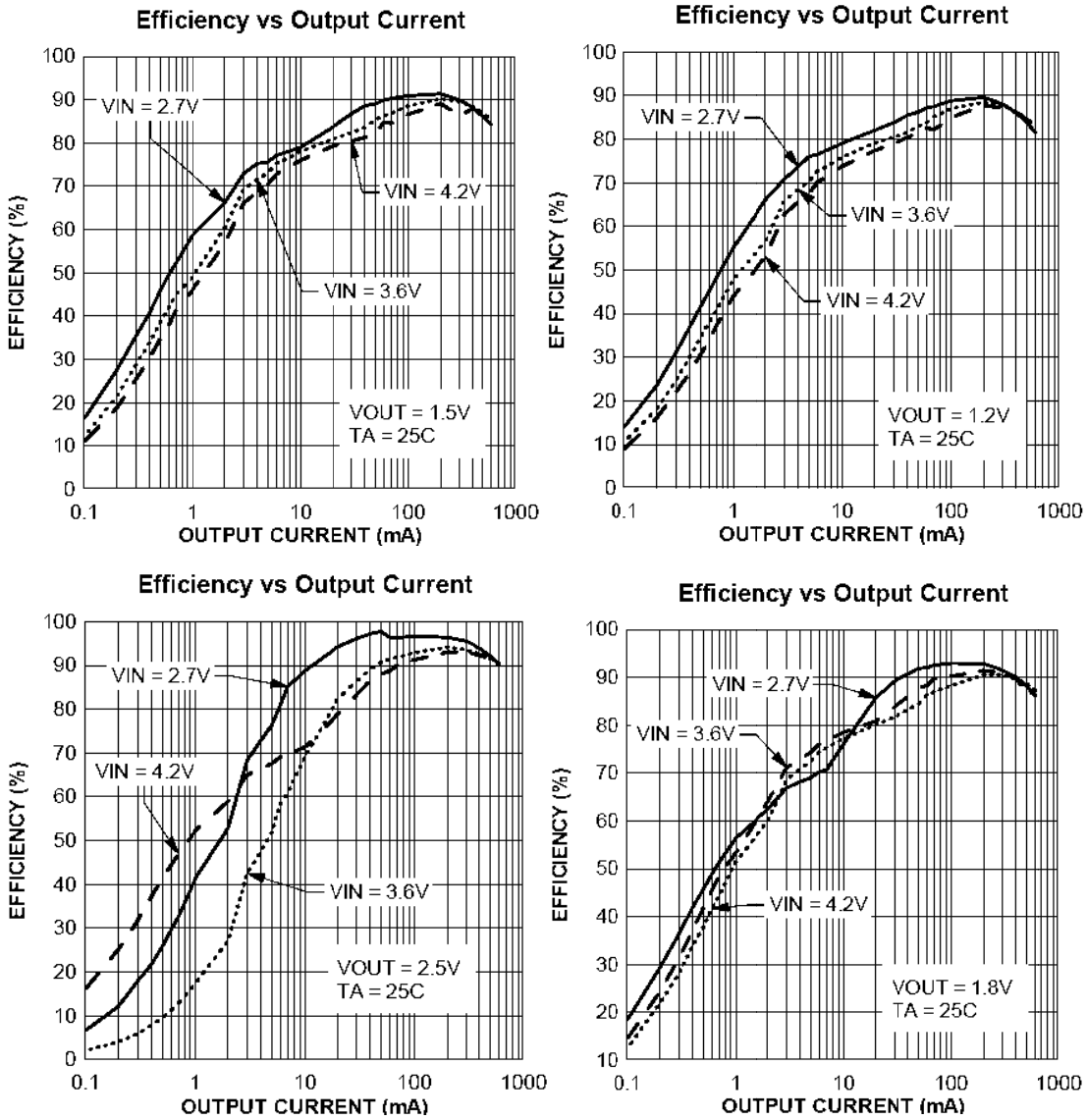

Efficiency vs Load Current

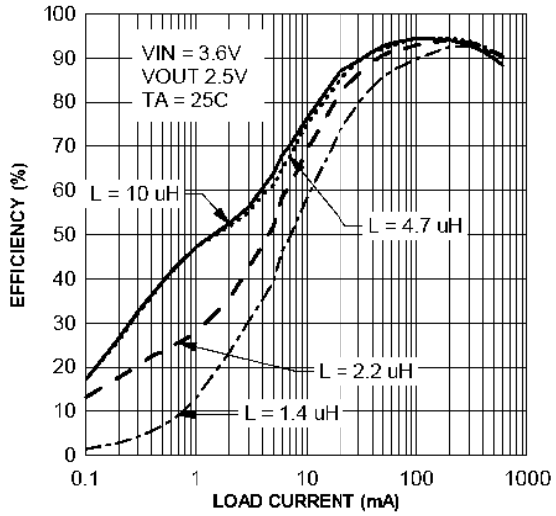

Efficiency vs Load Current

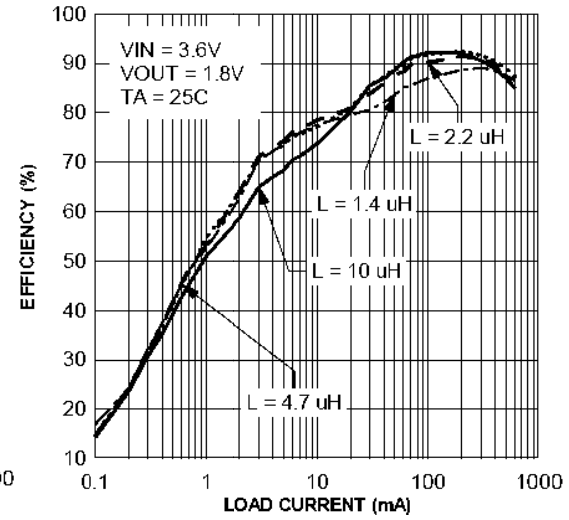

Outpu Voltage vs Load Current

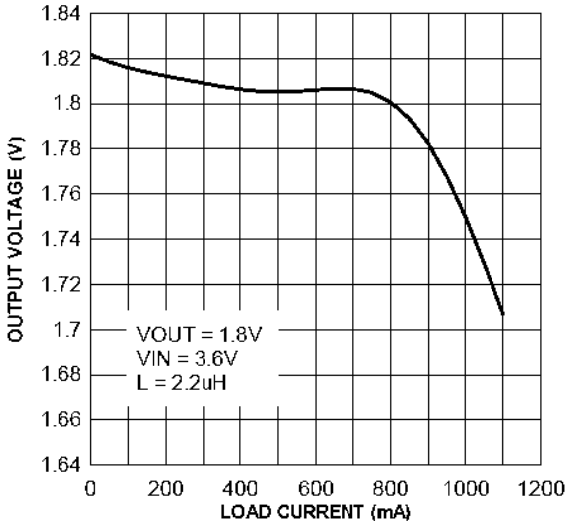

Efficiency vs Input Voltage

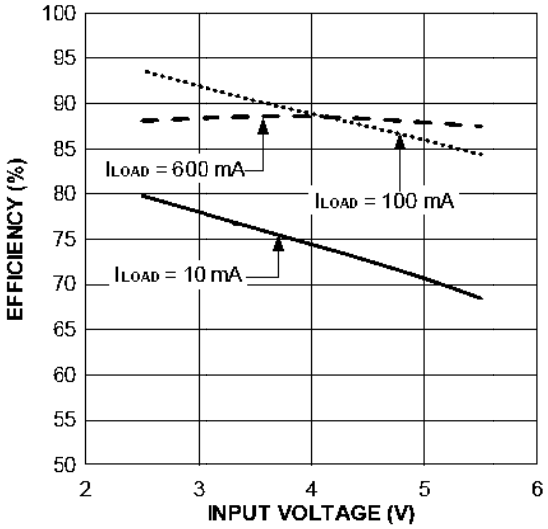

Frequency vs Input Voltage

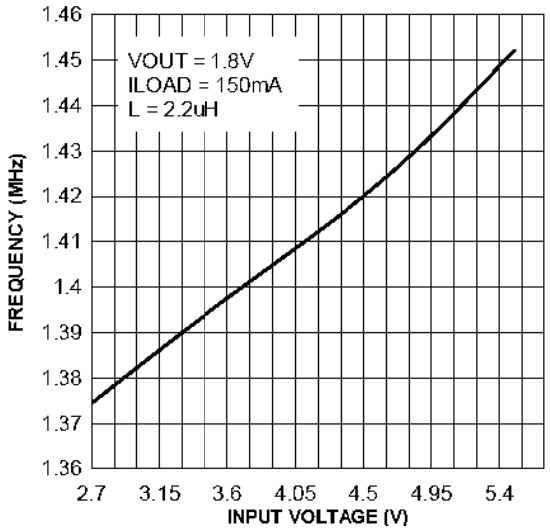

$R_{DS(ON)}$ vs Input Voltage

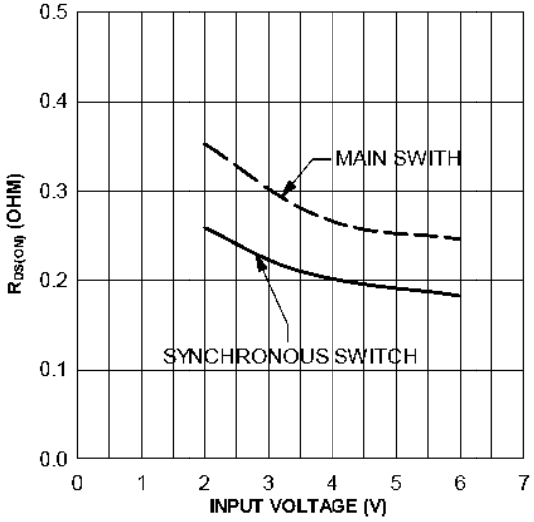

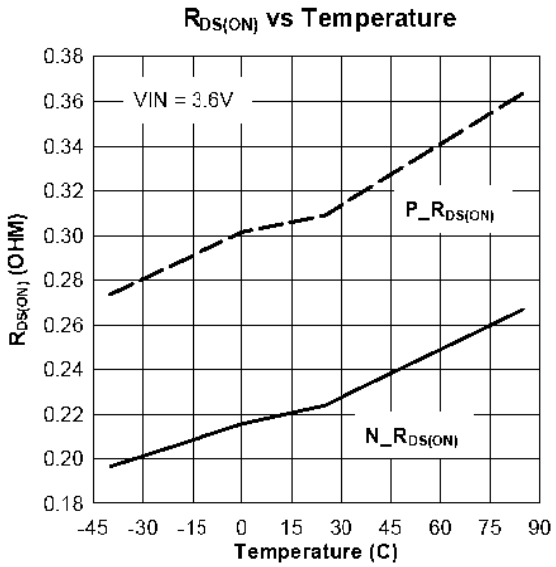
RDS(ON) vs Temperature
VIN = 3.6V
P_RDS(ON)
N_RDS(ON)
RDS(ON) (OHM)
0.38
0.36
0.34
0.32
0.30
0.28
0.26
0.24
0.22
0.20
0.18
-45 -30 -15 0 15 30 45 60 75 90
Temperature (C)

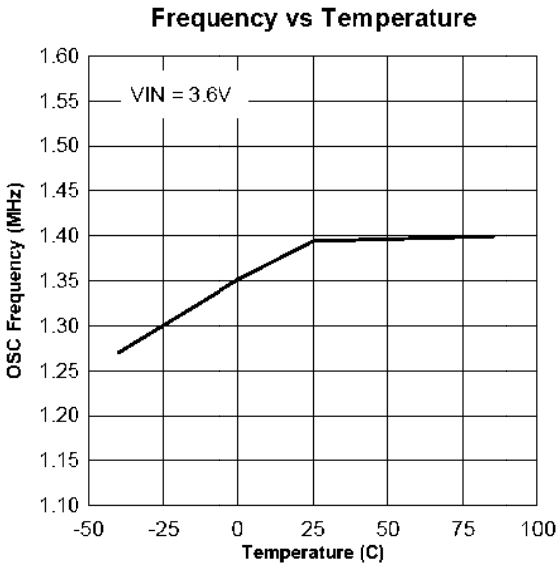
Frequency vs Temperature
VIN = 3.6V
OSC Frequency (MHz)
1.60
1.55
1.50
1.45
1.40
1.35
1.30
1.25
1.20
1.15
1.10
-50 -25 0 25 50 75 100
Temperature (C)

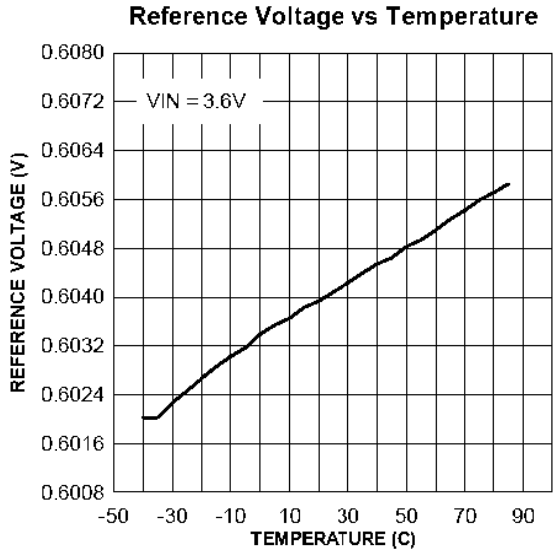
Reference Voltage vs Temperature
VIN = 3.6V
REFERENCE VOLTAGE (V)
0.6080
0.6072
0.6064
0.6056
0.6048
0.6040
0.6032
0.6024
0.6016
0.6008
-50 -30 -10 10 30 50 70 90
TEMPERATURE (C)

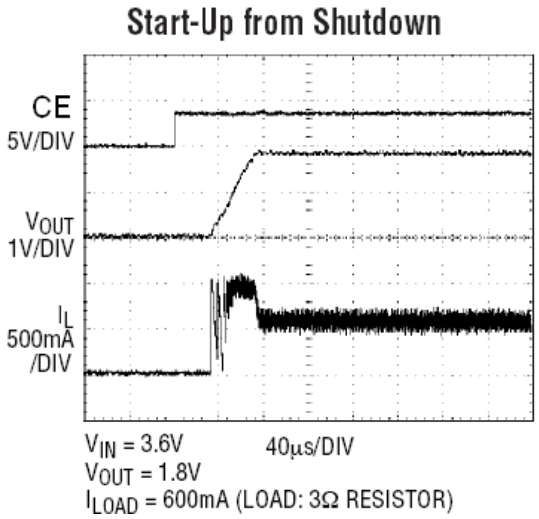
Start-Up from Shutdown
CE
5V/DIV
VOUT
1V/DIV
IL
500mA
/DIV
VIN = 3.6V
40µs/DIV
VOUT = 1.8V
ILOAD = 600mA (LOAD: 3Ω RESISTOR)

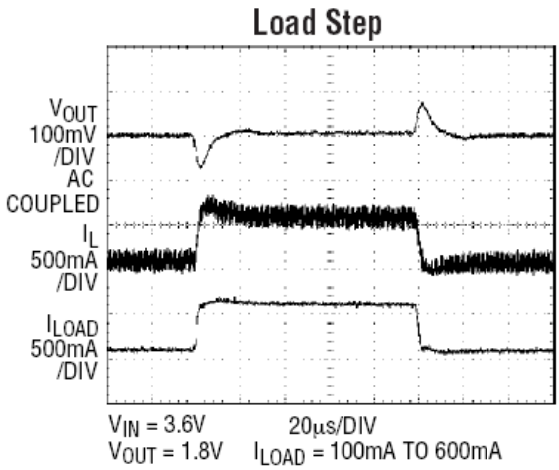
Load Step
VOUT
100mV
/DIV
AC
COUPLED
IL
500mA
/DIV
ILOAD
500mA
/DIV
VIN = 3.6V
20µs/DIV
VOUT = 1.8V
ILOAD = 100mA TO 600mA

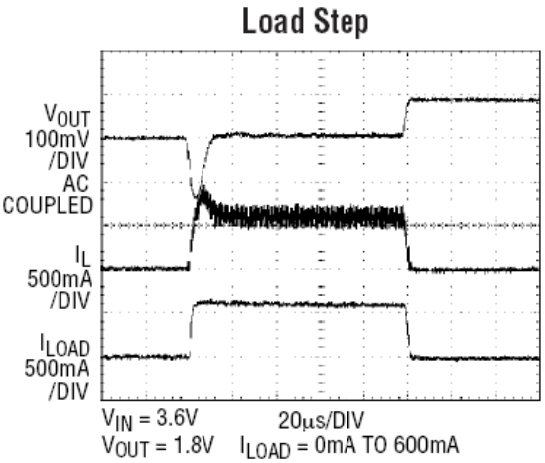
Load Step
VOUT
100mV
/DIV
AC
COUPLED
IL
500mA
/DIV
ILOAD
500mA
/DIV
VIN = 3.6V
20µs/DIV
VOUT = 1.8V
ILOAD = 0mA TO 600mA

■ OPERATION

MAIN CONTROL LOOP

The CE8502 uses a constant frequency, current mode step-down architecture. Both the main (P-channel MOSFET) and synchronous (N-channel MOSFET) switches are internal. During normal operation, the internal top power MOSFET is turned on each cycle when the oscillator sets the RS latch, and turned off when the current comparator, I_{COMP}, resets the RS latch. The peak inductor current at which I_{COMP} resets the RS latch, is controlled by the output of error amplifier EA. When the load current increases, it causes a slight decrease in the feedback voltage, FB, relative to the 0.6V reference, which in turn, causes the EA amplifier's output voltage to increase until the average inductor current matches the new load current. While the top MOSFET is off, the bottom MOSFET is turned on until either the inductor current starts to reverse, as indicated by the current reversal comparator I_{RCMP}, or the beginning of the next clock cycle.

MAXIMUM LOAD CURRENT

The CE8502 will operate with input voltage as low as 1.8V, however, the maximum load current decreases at lower input due to large IR drop on the main switch and synchronous rectifier. The slope compensation signal reduces the peak inductor current as a function of the duty cycle to prevent sub-harmonic oscillations at duty cycles greater than 50%.Conversely the current limit increase as the duty cycle decreases.

DISCONTINUOUS MODE OPERATION

At light loads, the inductor current may reach zero reverse on each pulse. The bottom MOSFET is turned off by the current reversal comparator, I_{RCMP}, and the switch voltage will ring. This is discontinuous mode operation, and is normal behavior for the switching regulator. At very light loads, the CE8502 will automatically skip pulses in discontinuous mode operation to maintain output regulation.

SLOPE COMPENSATION

Slope compensation provides stability in constant frequency architecture by preventing sub-harmonic oscillations at high duty cycles. It is accomplished internally by adding a compensating ramp to the inductor current signal at duty cycles in excess of 50%. This slope compensated current mode PWM control provides stable switching and cycle-by-cycle current limit for excellent load and line response.

DROPOUT OPERATION

As the input supply voltage decreases to a value approaching the output voltage, the duty cycle increases toward the maximum on-time. Further reduction of the supply voltage forces the main switch to remain on for more than one cycle until reaches 100% duty cycle. The output voltage will then be determined by the input voltage minus the voltage drop across the P-channel MOSFET and the inductor.

An important detail to remember is that at low inputs supply voltages, the $R_{DS(ON)}$ of the P-channel switch increases. Therefore, the user should calculate the power dissipation when the CE8502 is used at 100% duty cycle with low input voltage.

■ APPLICATION INFORMATION

The basic CE8502 application circuits are shown in Figure 1.External component selection is driven by the load requirement and begins with the selection of L followed by C_{IN} and C_{OUT}.

SETTING THE OUTPUT VOLTAGE

Figure1 shows the basic application circuit with CE8502 adjustable output version. The external resistor sets the output voltage according to the following equation:

$$V_{OUT} = 0.6V \times \left(1 + \frac{R2}{R1}\right)$$

Table 2.Resistor select for output voltage setting

V_{OUT}	R1	R2
1.2V	316K	316K
1.5V	316K	470K
1.8V	316K	634K
2.5V	316K	1M

INPUT CAPACITOR SELECTION

In continuous mode, the source current of the top MOSFET is a square wave of duty cycle V_{OUT}/V_{IN}. To prevent large voltage transients, a low ESR input capacitor sized for the maximum RMS current must be used. The maximum RMS capacitor current is given by:

$$C_{IN}\ \text{required}\ I_{RMS} \cong I_{OMAX}\frac{[V_{OUT}(V_{IN} - V_{OUT})]^{1/2}}{V_{IN}}$$

This formula has a maximum at $V_{IN} = 2V_{OUT}$, where $I_{RMS} = I_{OUT}/2$. This simple worst-case condition is commonly used for design because even significant deviations do not offer much relief. Ceramic capacitors with X5R or X7R dielectrics are highly recommended because of their low ESR and small temperature coefficients. A 4.7μF ceramic capacitor for most application is sufficient.

INDUCTOR SELECTION

For most applications, the value of the inductor will fall in the range of 1μH to 4.7μH. Its value is chosen based on the desired ripple current. Large value inductor lower ripple current and small value inductor result in higher ripple currents. Higher V_{IN} or V_{OUT} also increases the ripple current as shown in the following equation:

$$\Delta I_L = \frac{V_{OUT} \times (V_{IN} - V_{OUT})}{V_{IN} \times L \times f_{osc}}$$

A reasonable starting point for setting ripple current is $\triangle I_L$=240mA (40% of 600mA). The DC current rating of the inductor should be at least equal to the maximum load current plus half the ripple current to prevent core saturation.

Different core materials and shapes will change the size/current and price/current relationship of an inductor. The choice of which style inductor to use often depends more on the price vs. size requirements and any radiated field/EMI requirements than on what the CE8502 requires to operate. Table 3 shows some typical surface mount inductors that work well in CE8502 applications.

Table 3.Representative Surface Mount Inductors

PART NUMBER	VALUE (μH)	MAX DCR (mΩ)	MAX DC CURRENT (A)	SIZE W×L×H (mm^3)
Sumida CDRH 3D16	2.2 3.3 4.7	75 110 162	1.20 1.10 0.90	3.8×3.8 ×1.8
Sumida CR43	2.2 3.3 4.7	71.2 86.2 108.7	1.75 1.44 1.15	4.5×4.0 ×3.5
Sumida CDRH 4D18	2.2 3.3 4.7	75 110 162	1.32 1.04 0.84	4.7×4.7 ×2.0

OUTPUT CAPACITOR SELECTION

The selection of C_{OUT} is driven by the required effective series resistance (ESR). Typically, once the ESR requirement for C_{OUT} has been met, the RMS current rating generally far exceeds the I_{RIPPLE} requirement. The output ripple $\triangle V_{OUT}$ is determined by:

$$\Delta V_{OUT} \cong \Delta I_L \left(ESR + \frac{1}{8fC_{OUT}} \right)$$

Where f = operating frequency, C_{OUT} = output capacitance and $\triangle I_L$ = ripple current in the inductor. For a fixed output voltage, the output ripple is highest at maximum input voltage since $\triangle I_L$ increase with input voltage. Ceramic capacitors with X5R or X7R dielectrics are recommended due to their low ESR and high ripple current.

PCB LAYOUT GUIDANCE

When laying out the printed circuit board, the following suggestions should be taken to ensure proper operation of the CE8502.

1. The power traces, including the GND trace, the SW trace and the V_{IN} trace should be kept short, direct and wide to allow large current flow. Put enough multiply-layer pads when they need to change the trace layer.
2. Keep the switching node, SW, away from the sensitive FB node.
3. The FB pin should directly connect to the feedback resistors. The resistive divider R1/R2 must be connected between the (+) plate of C_{OUT} and ground.
4. Connect the (+) plate of C_{IN} to the V_{IN} pin as closely as possible.

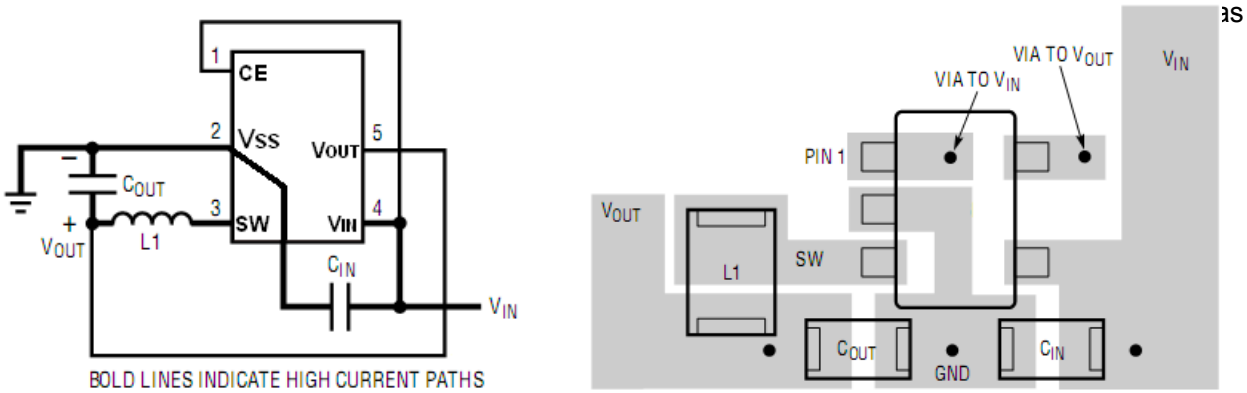

Figure 2a CE8502-1.8V Layout

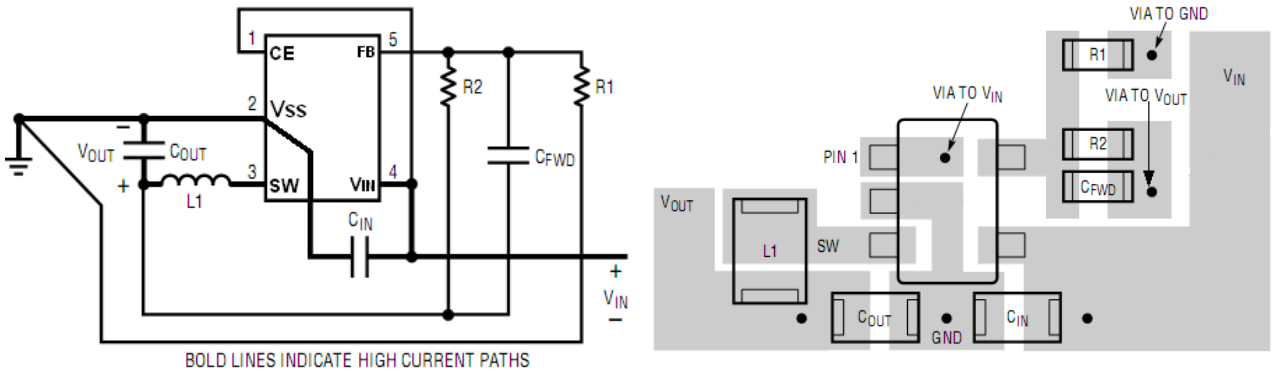

Figure 2b CE8502-Adj Layout

■ PACKAGING INFORMATION

● SOT23-5 Package Outline Dimensions

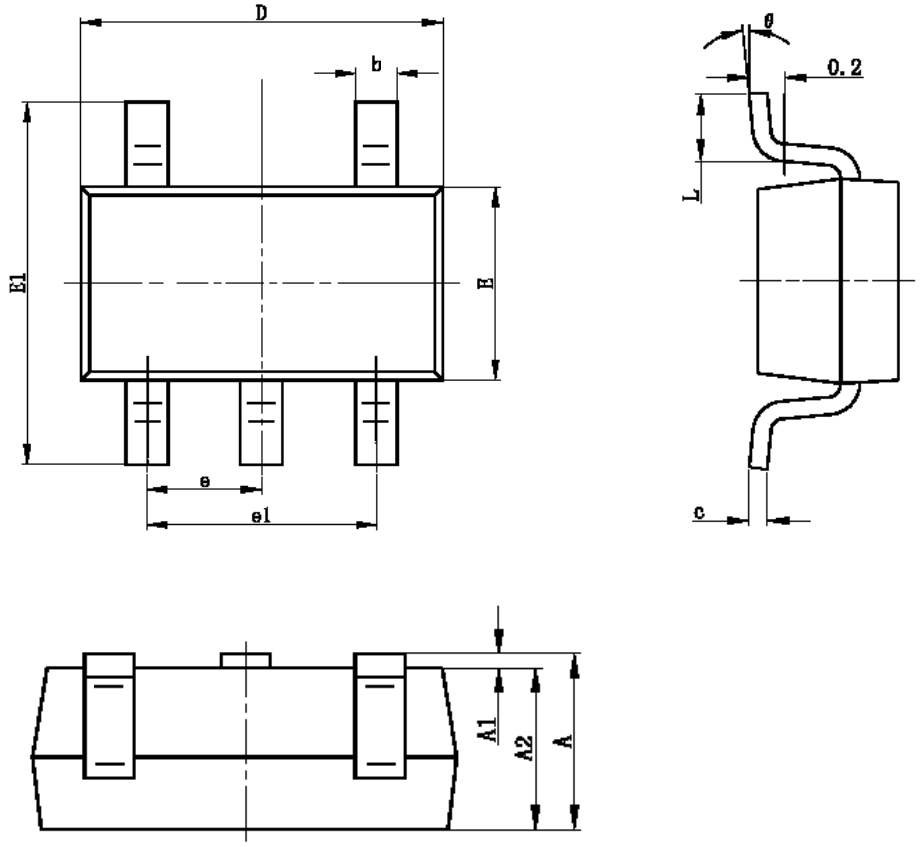

Symbol	Dimensions In Millimeters		Dimensions In Inches	
	Min	Max	Min	Max
A	1.050	1.250	0.041	0.049
A1	0.000	0.100	0.000	0.004
A2	1.050	1.150	0.041	0.045
b	0.300	0.500	0.012	0.020
c	0.100	0.200	0.004	0.008
D	2.820	3.020	0.111	0.119
E	1.500	1.700	0.059	0.067
E1	2.650	2.950	0.104	0.116
e	0.950(BSC)		0.037(BSC)	
e1	1.800	2.000	0.071	0.079
L	0.300	0.600	0.012	0.024
θ	0°	8°	0°	8°

© Nanjing Chipower Electronics Inc.

Chipower cannot assume responsibility for use of any circuitry other than circuitry entirely embodied in a Chipower product. No circuit patent license, copyrights or other intellectual property rights are implied. Chipower reserves the right to make changes to their products or specifications without notice. Customers are advised to obtain the latest version of relevant information to verify, before placing orders, that information being relied on is current and complete.